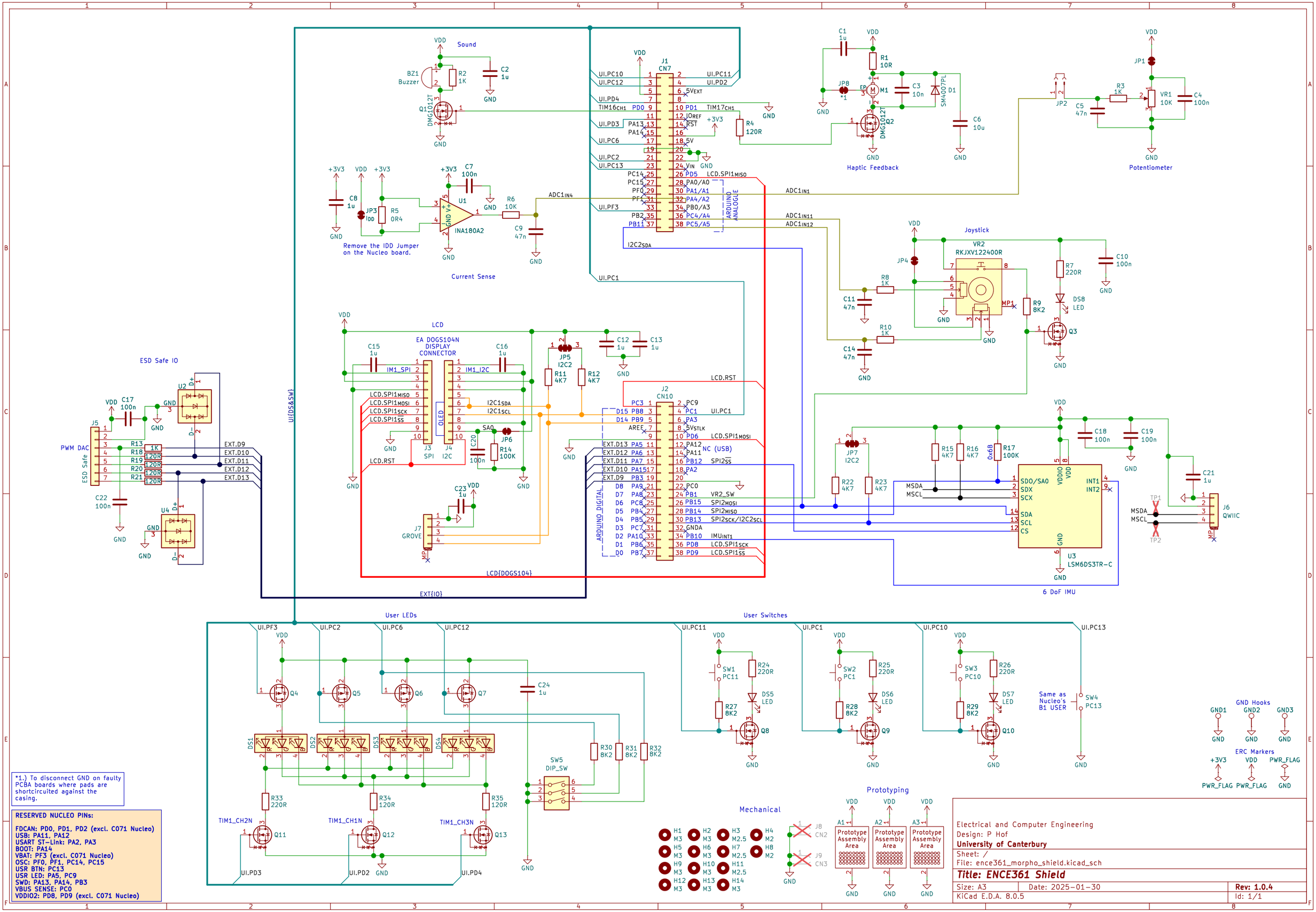

*1.) To disconnect GND on faulty PCBA boards where pads are shortcircuited against the casing.

RESERVED NUCLEO PINs:

FDCAN: PD0, PD1, PD2 (excl. C071 Nucleo)
USB: PA11, PA12
USART ST-Link: PA2, PA3
BOOT: PA14
VBAT: PF3 (excl. C071 Nucleo)
OSC: PF0, PF1, PC14, PC15
USR BTN: PC13
USR LED: PA5, PC9
SWD: PA13, PA14, PB3
VBUS SENSE: PC0
VDDIO2: PD8, PD9 (excl. C071 Nucleo)

Electrical and Computer Engineering
Design: P Hof
University of Canterbury
Sheet: /
File: ence361_morpho_shield.kicad_sch

Title: ENCE361 Shield

Size: A3	Date: 2025-01-30	**Rev: 1.0.4**
KiCad E.D.A. 8.0.5		Id: 1/1